RMB M50

Technical datasheet

Rev. 02 • Update 07/2023

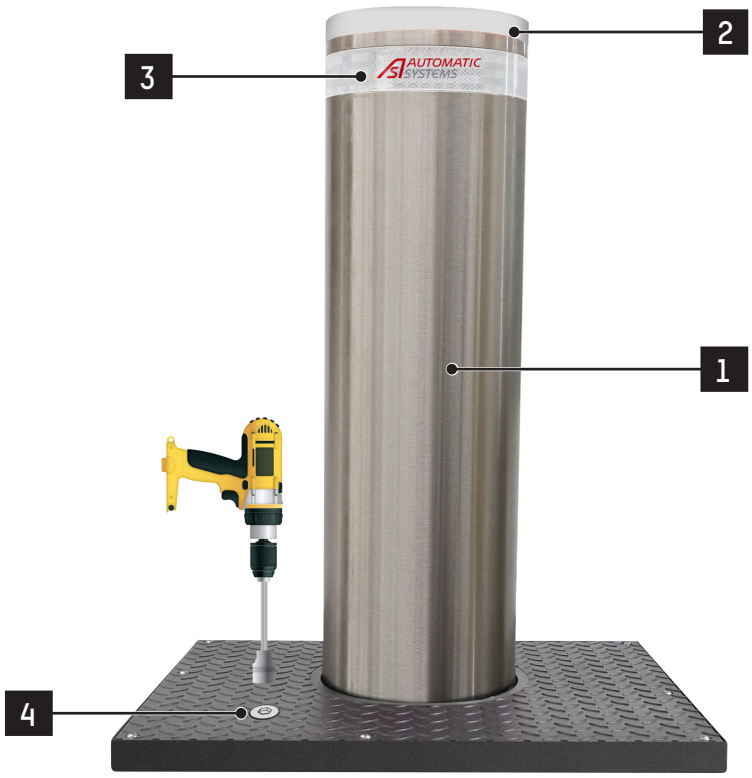

(Non contractual illustration)

The **RMB M50** High Security semi-automatic bollards are generally used to protect sensitive sites.

No power supply required: the **RMB M50** semi-automatic bollards do not need electric connections, for this reason the installation is quicker.

The product is more compact thanks to the integrated hydraulic unit and this ensure also a higher protection against tampering.

Lowering and raising the cylinder is done manually with an cordless screwdriver using a special insert provided.
The bollard can also be equipped with a security lock (optional).

The bollards are available in two different cylinder heights off the ground:

- **RMB M50_900** : 900mm
- **RMB M50_1200** : 1200mm

DESCRIPTION

1. Retractable obstacle with a diameter of 271 mm, thickness 23 mm.
   The obstacle is available in three finishes*: powder coated steel, powder coated stainless steel or brushed stainless steel (standard powder coat colour: anthracite grey).
2. 30 mm thick casted powder coated aluminium upper crown.
3. 55 mm reflective strip with Automatic Systems logo.
4. Cap for the actuating point that allows the cylinder to be raised or lowered.

* Product configuration to be specified when ordering.

STANDARD TECHNICAL CHARACTERISTICS

Impacts resistance certifications:	
RMB M50_900	
Rated in compliance with	DOS K12
Crash tested	PAS68:2013 V/7500(N3)/80/90:9.3/29.1 IWA 14-1:2013 V/7200(N3C)/80/90:9.6 ASTM M50 C750/7200 P3
RMB M50_1200	
Rated in compliance with	IWA 14-1:2013 V/7200(N3C)/80/90 DOS K12
Crash tested	PAS68:2013 V/7500(N3)/80/90:1.4/8.0 ASTM M50/P3
Breakout resistance (type of vehicles)	3,5T at 112 km/h 7,5T at 80 km/h
Breakout resistance	2.000.000 joules
Impact resistance (without deformation)	700.000 joules

	RMB M50_900	RMB M50_1200
Obstacle height	900 mm	1200
Cylinder diameter	271 mm	
Foundation dimensions	1800 x 1500 mm	
Foundation depth	1700 mm	2000 mm
Weight incl. foundation box	812 kg	892 kg
Foundation box weight	78 kg	93 kg
Rising time	15 sec. (with a drill)	
Lowering time	6 sec. (with a drill)	
Ambient operating temperature	-40°C +70°C	
IP rating	IP 67	
Load class	D400	
Complies with European standards		

WORKS TO BE PROVIDED BY THE CUSTOMER

- Sealing of the frame in a concrete foundation.
- Drainage or connection to main drainage.

Note: Follow the installation plan.

OPTIONS

FOUNDATION BOX

- Foundation box in aluzinc - Counterframe with ground anchoring rods.
- Suspended foundation box in AISI 304 - Counterframe (chemical anchors excluded). [1]
- Metal cover cap for the temporary closure of the counterframe with screws during the civil work phase.
- Counterframe top in stainless steel AISI 304.

AESTHETICS

- Finely structured matt powder coating (any RAL colour on request) of cylinder.
- Cylinder in brushed stainless steel AISI 316 instead of AISI 304.
- Counterframe cover in stainless steel AISI 304.
- Anti-corrosion marine treatment for bollards in powder coated steel (includes cylinder + frame + counterframe + foundation box). ⓘ
- Anti-corrosion marine treatment for bollards in powder coated stainless steel (includes cylinder + frame + counterframe + foundation box). ⓘ
- Anti-corrosion marine treatment for bollards in brushed stainless steel (includes cylinder + frame + counterframe + foundation box). ⓘ
- Cylinder in powder coated knurled steel .
- Cylinder in knurled stainless steel.

OTHER OPTIONS

- EuroLock profile (with 2 keys) on the counterframe for mechanical blocking of the operating point (the mechanical blocking element is removed to free the access for the drill).

[1] The bollard assembled in the suspended foundation box is not crash-test certified.

ⓘ Recommended for installations less than 3 km away from the sea or for location were de-icing salt is sprayed in the winter time.

Note: For restrictions on options, please contact us.

RMB M50

Technical datasheet

Rev. 02
Update 07/2023

OPERATING PRINCIPLE



RAISING

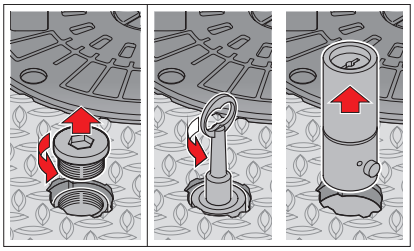

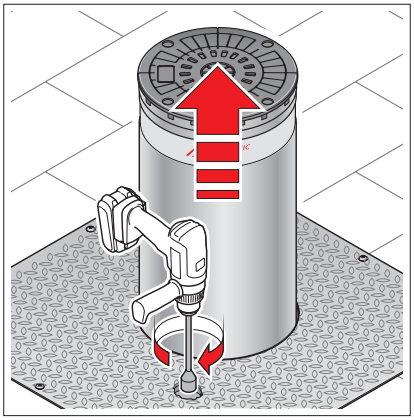

LOWERING

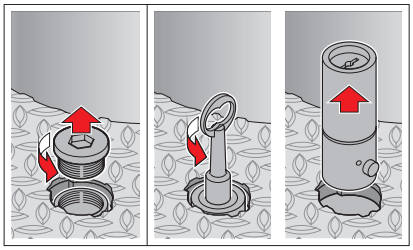

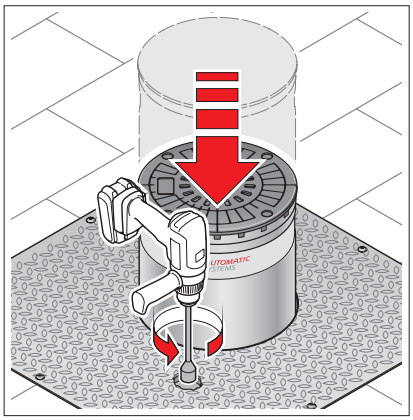

STANDARD DIMENSIONS (MM)

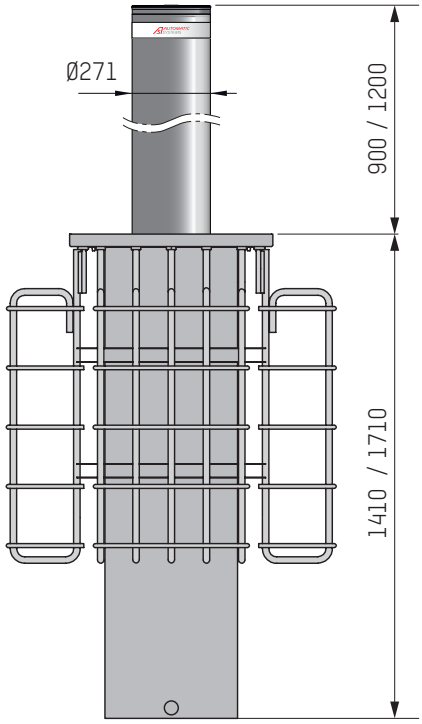

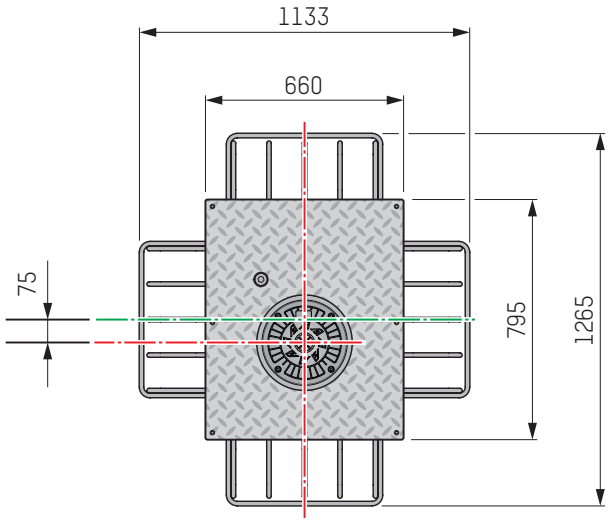

Headquarters
Avenue Mercator, 5
1300 Wavre - Belgium

sales.asgroup@automatic-systems.com

+32.(0)10.23.02.11

www.automatic-systems.com

With a constant view of adopting the latest technological developments, Automatic Systems reserves the right to amend the information above, at any time. Non-contractual document.